REVISIONS				
REV. SYM.	E.C.O. NUMBER	DESCRIPTION	BY DATE	APP'D DATE
1		ORIGINAL RELEASE	BG 12/2/88	DE 12/88

UNCONTROLLED DOCUMENT WILL NOT BE UPDATED

SOURIAU 8400-2281
BOITIER 2 SHELL SIZE 2

CONTACT	COLOR CODE	#16	1.5°	#14				FIL WIRE
1 ; 2	BLUE	6	6	7				SELECTOR SELECTEUR
⏚	RED	6	6	7				

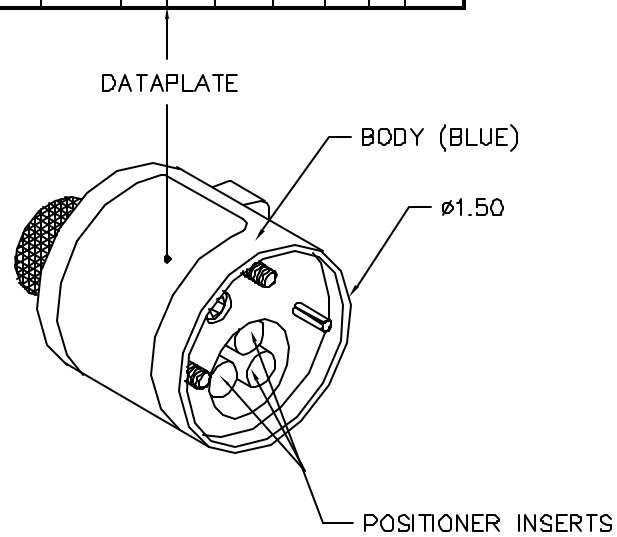

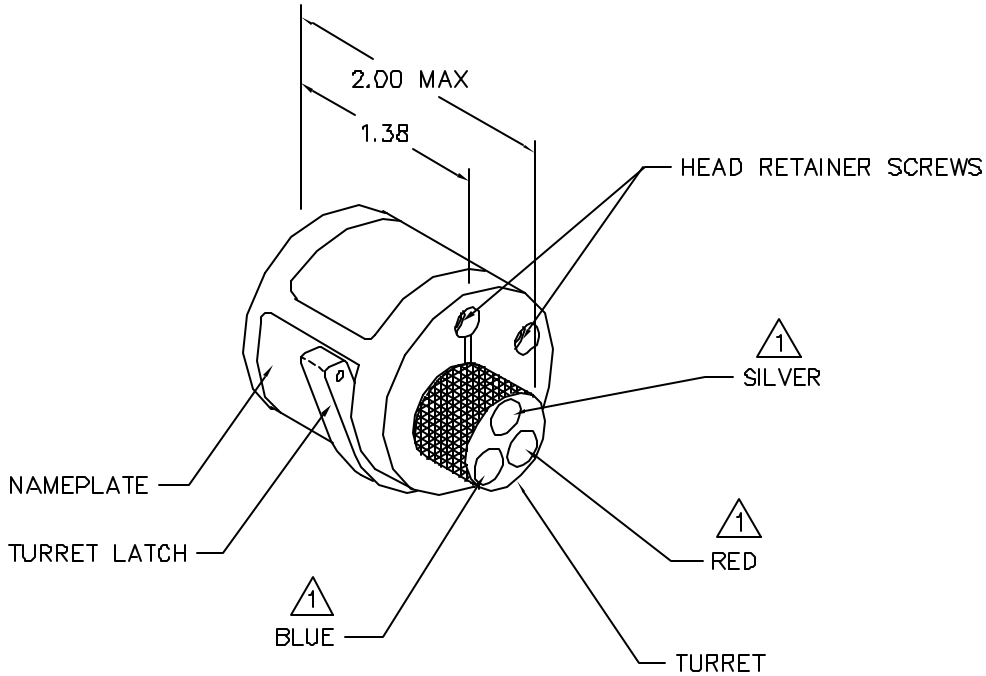

1 RANDOM ORDER OF ROTATION IS ACCEPTABLE.

POSITIONER COLOR	HOLE DIMENSIONS	ADDITIONAL FEATURES
BLUE	ø.125 ↧.84 MIN	⌴ ø.150 ↧.035
RED	ø.161 ↧.882	⌴ ø.173 ↧.228
SILVER		

HOLE AND COUNTERBORE DEPTHS ARE MEASURED FROM TOP OF POSITIONER INSERTS.

RESTRICTED & CONFIDENTIAL

CONFIDENTIAL PROPERTY OF DANIELS MANUFACTURING CORP. NOT TO BE DISCLOSED TO OTHERS, REPRODUCED OR USED FOR ANY OTHER PURPOSE, EXCEPT AS AUTHORIZED IN WRITING BY DANIELS MANUFACTURING. MUST BE RETURNED TO DANIELS MANUFACTURING CORP. ON COMPLETION OF ORDER OR OTHER PURPOSE FOR WHICH LENT.

DO NOT SCALE DRAWING

ITEM	PART NO.	QTY.	DESCRIPTION/REMARKS

DRN. BG	DATE 12/2/88	DANIELS MANUFACTURING CORP. ORLANDO, FLORIDA CAGE 17851
CHK'D. MGS	DATE 12/2/88	
APP'D. AAM	DATE 12/2/88	TITLE TURRET HEAD ENVELOPE DRAWING
APP'D.	DATE	WHERE USED: AF8

NOTE: THIS DRAWING IS AN OUTLINE DRAWING OF THE RESPECTIVE DMC PART NUMBER INDICATED. ACTUAL DMC PART NUMBER IS DRAWING NUMBER WITHOUT THE "-ENV" SUFFIX.

SIZE	SCALE	CAD P/N	SHEET OF
B	NTS	TH4D6-ENV	1 1
POSTING		DWG. NO. TH406-ENV	REV. 1